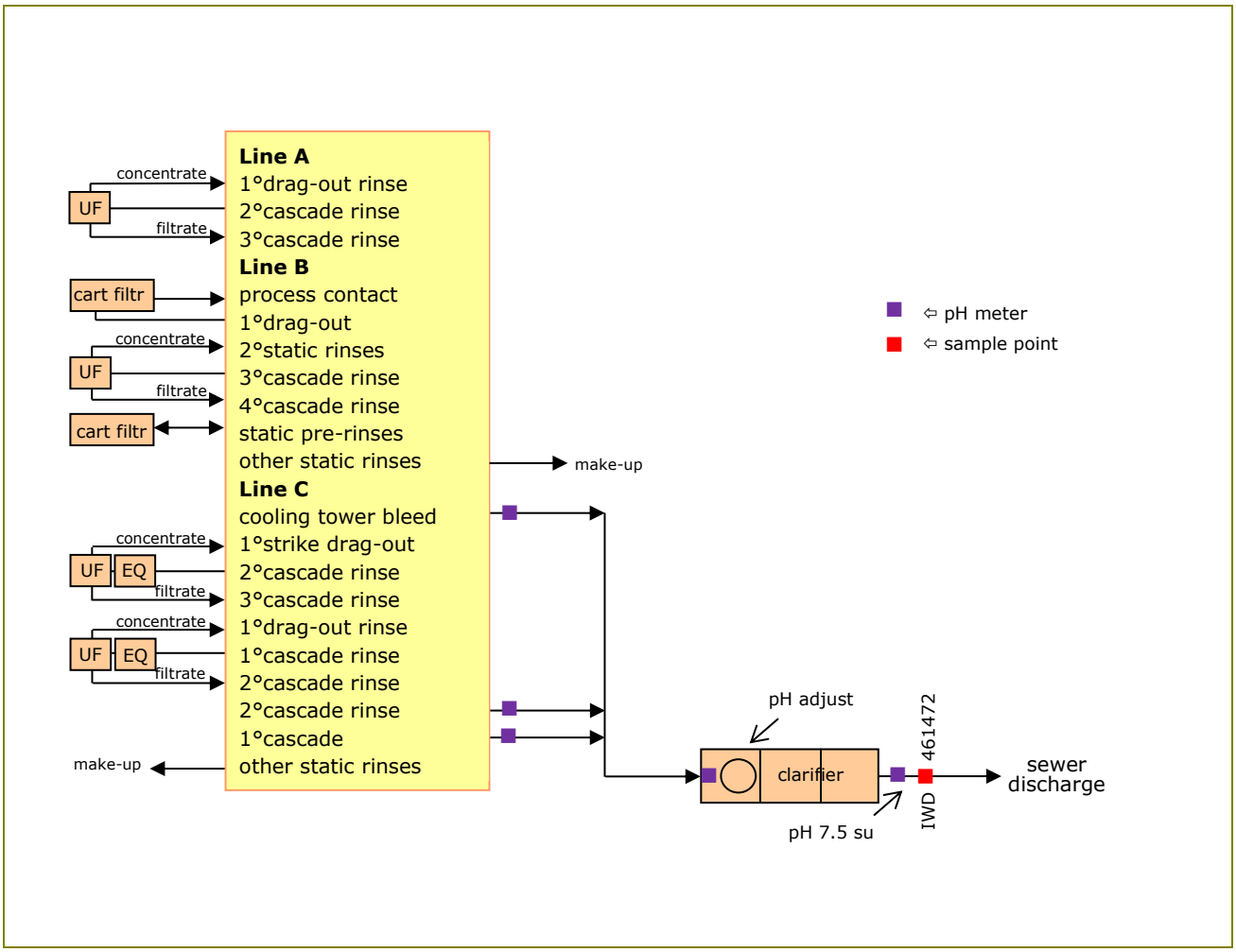
Line A
1°drag-out rinse
2°cascade rinse
3°cascade rinse
Line B
process contact
1°drag-out
2°static rinses
3°cascade rinse
4°cascade rinse
static pre-rinses
other static rinses
Line C
cooling tower bleed
1°strike drag-out
2°cascade rinse
3°cascade rinse
1°drag-out rinse
1°cascade rinse
2°cascade rinse
2°cascade rinse
1°cascade
other static rinses
concentrate
UF
filtrate
cart filtr
concentrate
UF
filtrate
cart filtr
concentrate
UF
EQ
filtrate
concentrate
UF
EQ
filtrate
make-up
make-up
pH meter
sample point
pH adjust
clarifier
pH 7.5 su
461472
IWD
sewer
discharge